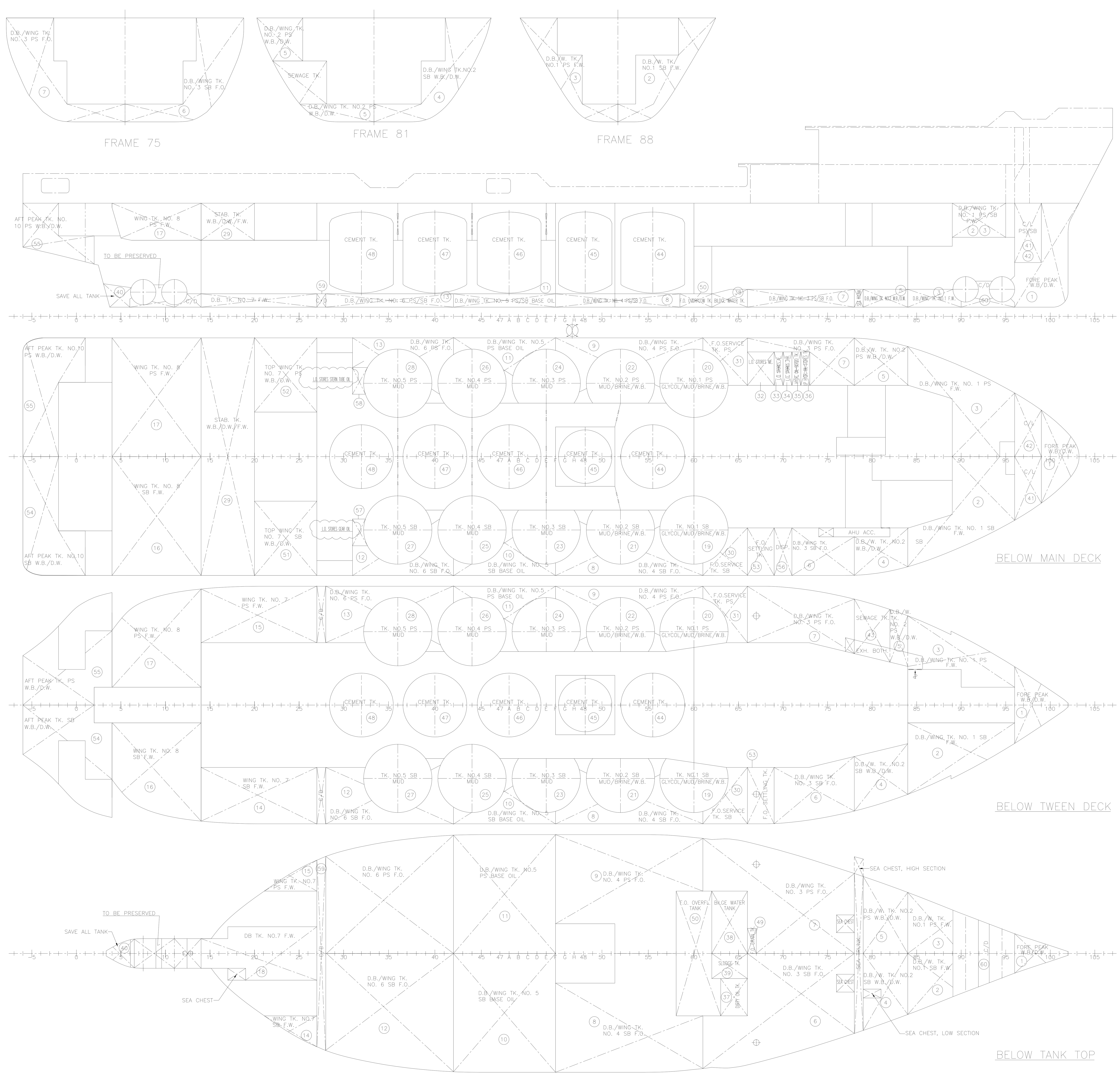

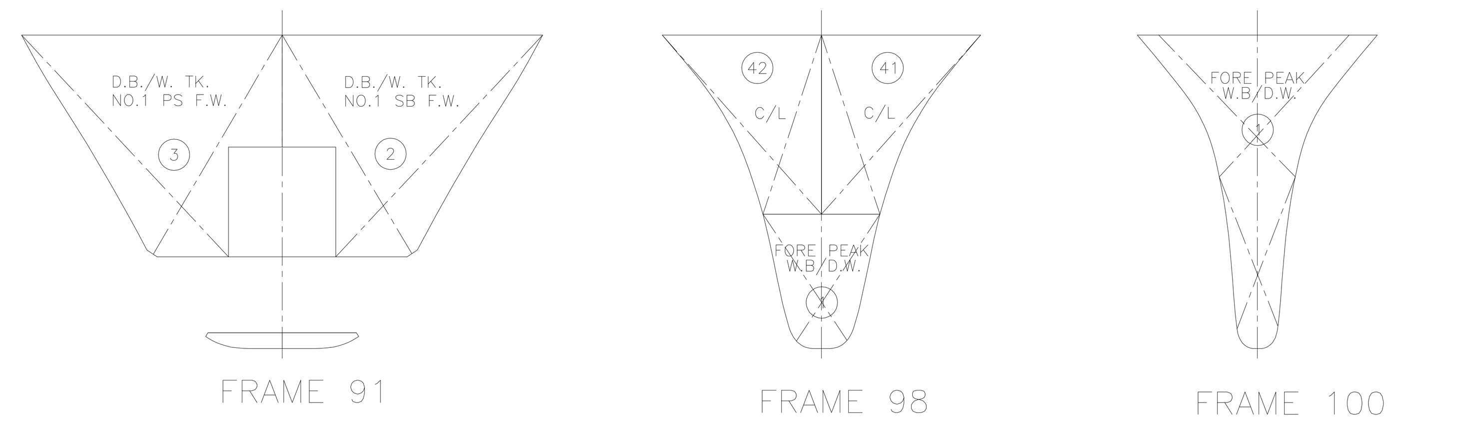

TANK NO.	AIR PIPE HEIGHTS AB. BL.	TANK ID.	FRAME MIN. #	FRAME MAX. #	CONTENTS	DENSITY	VOLUME (M3)	WB 1.025	DW 1.000	FW 1.000	FO 0.900	BO 0.830	BRI 2.500	MUD 2.500	CEM 2.400	LCG (AP)	VCG (BL)	TCG (CL)	IT (M4)
								WEIGHT(TONNES) / DENSITY (T/M3)								CENTER OF GRAVITY (M)			
01		FOREPEAK TK	96	103	WB/DW	1.025	32.7	33.6	32.7							65.167	3.716	-0.000	19
02		DB/WING TK 1 SB	84	96	FW	1.000	120.5			120.5						59.288	4.197	2.808	106
03		DB/WING TK 1 PS	84	96	FW	1.000	107.7			107.7						59.437	4.353	-2.937	103
04		DB/WING TK 2 SB	78	84	WB/DW	1.025	64.1	65.7	64.1							54.212	3.408	4.574	26
05		DB/WING TK 2 PS	78	84	WB/DW	1.025	47.5	48.7	47.5							54.432	3.689	-4.535	26
06		DB/WING TK 3 SB	61	78	FO	0.900	134.8				121.3					49.027	2.628	4.970	207
07		DB/WING TK 3 PS	61	78	FO	0.900	153.4				138.1					48.619	2.694	-5.208	197
08		DB/WING TK 4 SB	48	61	FO	0.900	144.7				130.2					36.969	2.702	5.918	284
09		DB/WING TK 4 PS	48	61	FO	0.900	144.6				130.2					36.968	2.702	-5.918	284
10		DB/WING TK 5 SB	42	48	FO/BO	0.830	101.9				91.7	84.6				28.891	2.391	5.519	293
11		DB/WING TK 5 PS	42	48	FO/BO	0.830	101.9				91.7	84.6				28.891	2.391	-5.519	293
12		DB/WING TK 6 SB	28	42	FO	0.900	143.6				129.3					21.120	2.507	5.452	302
13		DB/WING TK 6 PS	28	42	FO	0.900	143.6				129.3					21.120	2.507	-5.452	302
14		WING TK 7 SB	14	27	FW	1.000	74.5			74.5						12.756	3.022	5.907	32
15		WING TK 7 PS	14	27	FW	1.000	74.4			74.4						12.734	3.024	-5.904	33
16		WING TK 8 SB	4	14	FW	1.000	172.7			172.7						5.599	5.031	3.950	256
17		WING TK 8 PS	4	14	FW	1.000	172.7			172.7						5.599	5.031	-3.950	256
18		DB TK 7	14	27	FW	1.000	20.4			20.4						12.765	0.460	-0.030	23
19		TK 1 SB	56	64	GLYCOL/MUD/BRI/WB/DW/FO	2.500	87.7	89.8	87.7		78.9		219.1	219.1		41.570	4.147	5.154	22
20		TK 1 PS	56	64	GLYCOL/MUD/BRI/WB/DW/FO	2.500	87.7	89.8	87.7		78.9		219.1	219.1		41.570	4.147	-5.154	22
21		TK 2 SB	48	56	MUD/BRI/WB/DW/FO	2.500	84.6	86.7	84.6		76.1		211.4	211.4		36.650	3.950	5.251	13
22		TK 2 PS	48	56	MUD/BRI/WB/DW/FO	2.500	84.6	86.7	84.6		76.1		211.4	211.4		36.650	3.950	-5.251	13
23		TK 3 SB	47	48	MUD/FO	2.500	84.6				76.1			211.4		31.650	3.950	5.251	13
24		TK 3 PS	47	48	MUD/FO	2.500	84.6				76.1			211.4		31.650	3.950	-5.251	13
25		TK 4 SB	40	47	MUD/FO	2.500	99.8				89.8			249.4		26.650	3.950	4.940	22
26		TK 4 PS	40	47	MUD/FO	2.500	99.8				89.8			249.4		26.650	3.950	-4.940	22
27		TK 5 SB	32	40	MUD/FO	2.500	99.8				89.8			249.4		21.650	3.950	4.940	22
28		TK 5 PS	32	40	MUD/FO	2.500	99.8				89.8			249.4		21.650	3.950	-4.940	22
29		STAB TK 1	14	20	WB/DW/FW	1.025	139.7	143.2	139.7	139.7						10.200	5.750	0.000	1229
30		FO SERVICE TK	61	66	FO	0.900	39.1				35.2					44.075	4.020	6.554	9
31		FO SETTLING TK	61	66	FO	0.900	39.1				35.2					44.075	4.020	-6.554	9
32		LO STORES TK MAIN ENG	66	69	LO	0.924	11.4									46.100	5.550	-5.925	2
33		LO STORES TK AUX ENG	69	70	LO	0.924	3.8									47.300	5.550	-5.925	1
34		LO STORES TK THR	70	71	LO	0.924	3.8									47.900	5.550	-5.925	1
35		HYDR. OIL SERVO TK.	71	72	HO	0.924	3.8									48.500	5.550	-5.925	1
36		LP HYDR OIL STORES TK	72	73	HO	0.924	3.8									49.100	5.550	-5.925	1
37		DIRTY OIL TK	63	66	MIS	1.000	3.8									44.309	0.476	3.129	2
38		BILGE WATER TK	62	66	MIS	1.000	9.3									44.055	0.511	-2.045	15
39		SLUDGE TK	62	66	MIS	1.000	4.4									44.053	0.567	0.845	1
40		SAVE ALL TK	3	6	MIS	1.000	2.5									2.977	0.762	0.000	0
41		CHAIN LOCKER SB	96	99	CHA	1.025	17.2									64.028	5.317	1.309	8
42		CHAIN LOCKER PS	96	99	CHA	1.025	17.2									64.028	5.317	-1.309	8
43		SEWAGE TK	78	82	MIS	1.000	18.8									53.585	2.806	-4.629	10
44		CEMENT TK 1	48	51	CEM	2.400	64.8								155.5	34.275	3.900	-0.000	8
45		CEMENT TK 2	52	59	CEM	2.400	47.1								113.0	38.825	3.900	0.000	17
46		CEMENT TK 3	45	47	CEM	2.400	64.8								155.5	29.150	3.900	0.000	17
47		CEMENT TK 4	37	43	CEM	2.400	64.8								155.5	24.150	3.900	0.000	17
48		CEMENT TK 5	28	36	CEM	2.400	64.8								155.5	19.200	3.900	0.000	17
49		FO DRAIN TK	66	67	MIS	1.000	1.2									45.500	0.600	-0.845	0
50		FO OVERFLOW	58	64	MIS	1.000	18.6									41.682	0.447	0.174	131
51		TOP WING TK 7 SB	20	27	WB/DW	1.025	50.9	52.2	50.9							14.100	5.750	5.500	44
52		TOP WING TK 7 PS	20	27	WB/DW	1.025	50.9	52.2	50.9							14.100	5.750	-5.500	44
53		FO SETTLING TK	66	69	FO	0.900	34.2				30.8					46.095	4.046	6.182	8
54		AFT PEAK TK SB	-6	4	WB/DW	1.025	65.8	67.5	65.8							-1.381	5.498	3.622	130
55		AFT PEAK TK PS	-6	4	WB/DW	1.025	65.8	67.5	65.8							-1.381	5.498	-3.622	130
56		DISP TK	69	71	MIS	1.000	10.8									47.600	5.552	6.398	3
57		LO STORES GEAR OIL	31	33	LO	0.924	3.6									19.011	5.750	5.124	0
58		LO STORES STERN TUBE	31	33	LO	0.924	3.6									19.011	5.750	-5.124	0
59		CD #27	27	28	CD	1.000	20.2									16.501	2.186	0.000	175
60		CD BELOW FWD TUNNEL	90	96	CD	1.000	6.6									61.243	0.477	0.000	8
61		CD BELOW AFT TUNNEL	11	14	CD	1.000	2.4									7.675	0.395	0.000	1
62		CD BETWEEN AFT TUNNELS	7	11	CD	1.000	2.6									5.340	0.308	0.000	2
		TOTAL WEIGHTS						883.5	862.0	882.6	1884.4	169.2	861.1	2281.6	735.1				
		TOTAL VOLUMES						862.0	862.0	882.6	2093.8	203.9	344.4	912.6	306.3				
		VOLUMES ACC. TO BUILD. SPEC								920	1910	200	390	960	306				

Rev.	Date	Reason for issue	Made by	Chk'd by	Disc. appr.	Client appr.
D	24.03.06	CORRECTED ACC. YARD COMMENTS	ØA			
C	25.10.05	CORRECTED ACC. OWNERS COMMENTS	ØA			
B	06.10.05	CORRECTED ACC. OWNERS COMMENTS	ØA			
A	24.06.05	CORRECTED ACC. OWNERS COMMENTS	ØA	TT		
0	13.05.05	FIRST ISSUE	LB/mk			

CUSTOMER
PAN-UNITED MARINE
SWIRE PACIFIC OFFSHORE

Yard no.: 167 168

TITLE
TANK PLAN
PACIFIC ASSEGAI

Rolls-Royce
UT-Design™
Rolls-Royce Marine AS
dept. Ship Technology - Offshore
Sjogata 80, P.O.Box 160
N-6067 Ulsteinvik, NORWAY
Tel.:+47 70 01 40 00
Fax:+47 70 01 40 31
Homepage: www.rolls-royce.com
Enterprise NO 960 371 379

Scale	Format	PROJECT NO.	SFI no.	Seq. no.	Revision
1:100	A0	047241	101	020	D

This drawing/specification is the property of Rolls-Royce Marine AS, dept. Ship Technology - Offshore, and must not be copied or the contents thereof or any information received in conjunction therewith must not be imparted to any unauthorised third party. It must not be used for any other project than for which it was originally ordered. The receipt of the drawing / specification implies that the conditions mentioned herein are accepted.