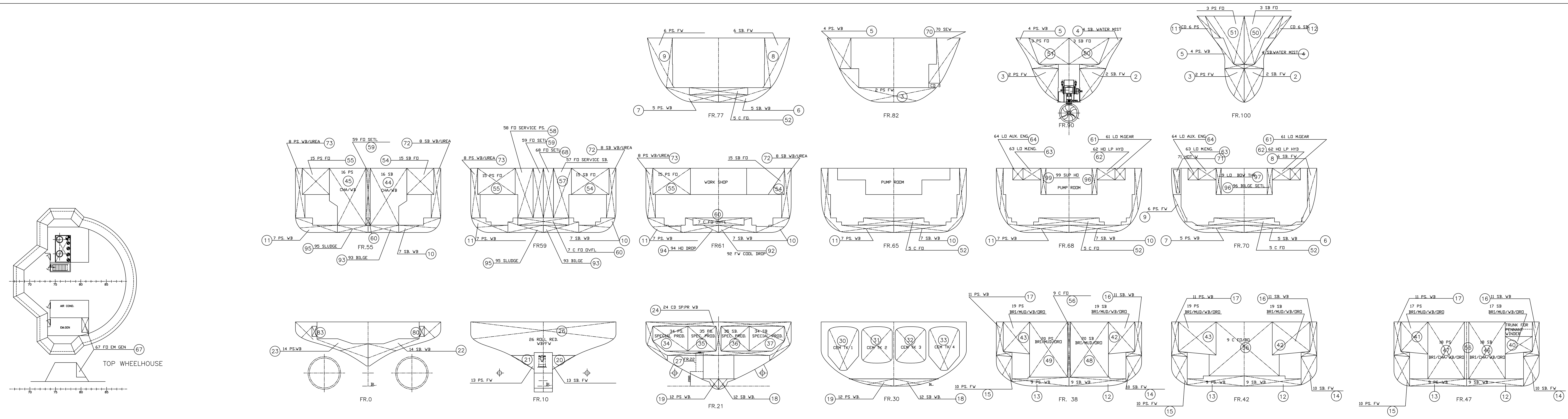

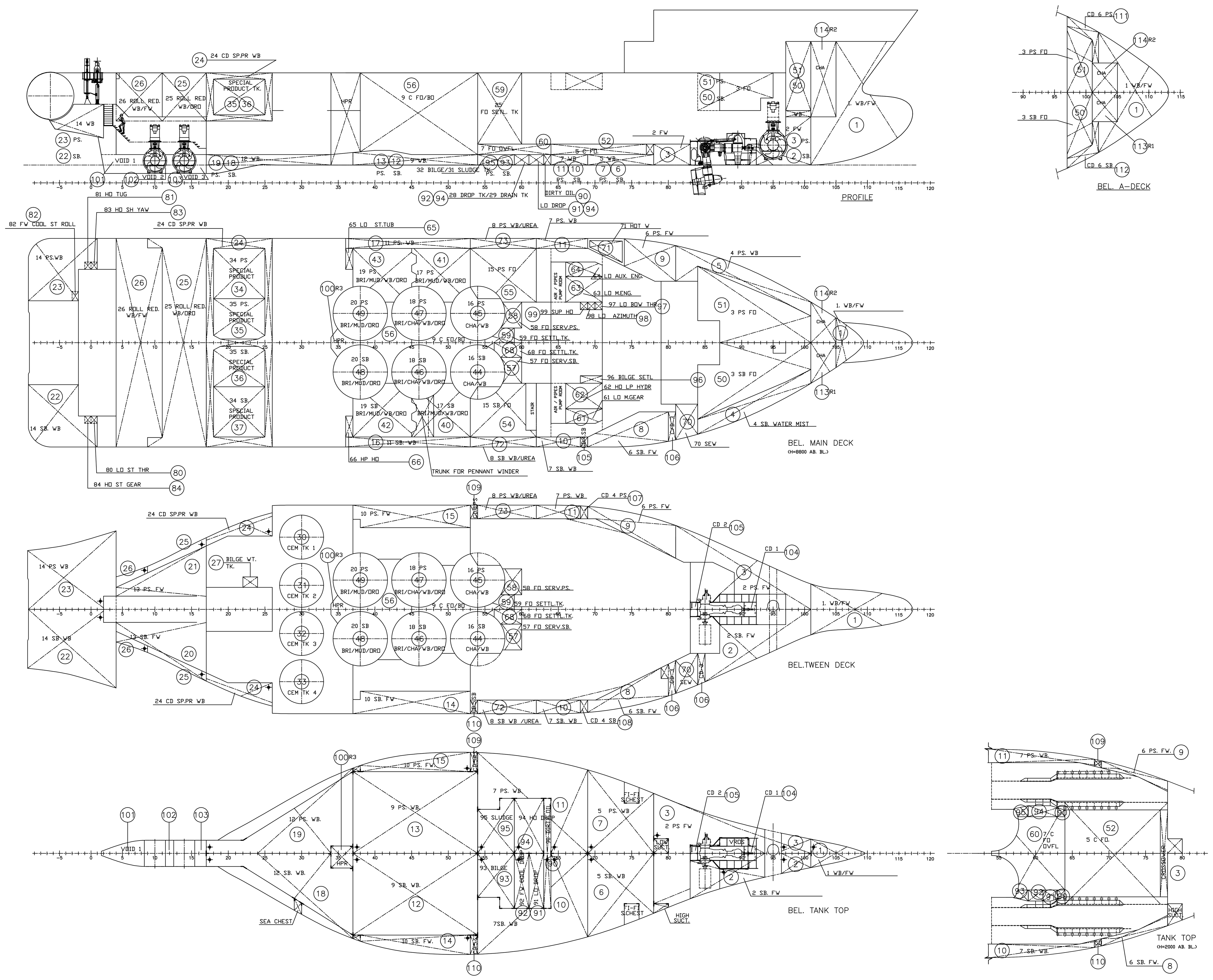

TANK NO.	AIR PIPE HEIGHTS AB. BL.	TANK ID.	FRAME MIN. #	FRAME MAX. #	CONTENTS	DENSITY	VOLUME (M3)	WB 1.025	FW 1.000	FO 0.900	BRI 2.800	ORO 1.000	MUD 2.800	CEM 2.400	BO 0.830	SPE 1.500	LCG (AP)	VCG (BL)	TCG (CL)	IT (M4)	PAINT AREA m2
001	15560	1 WB/FW	101	117	WB/FW	1.025	201.4	206.4	201.4								72.335	6.415	-0.000	337	814,32
002	15560	2 SB FW	83	101	FW	1.000	89.1		89.1								63.240	2.663	2.419	61	406,81
003	15560	2 PS FW	78	101	FW	1.000	165.8		165.8								59.662	2.133	-1.928	588	708,15
004	15560	4 SB WATER MIST	84	101	MIS	1.000	67.0										63.054	6.515	4.585	71	491,65
005	15560	4 PS WB	81	101	WB	1.025	84.1	86.2									61.703	6.678	-5.200	81	565,48
006	11200	5 SB WB	69	78	WB	1.025	40.6	41.6									50.351	0.608	3.360	174	210,28
007	11200	5 PS WB	69	78	WB	1.025	40.6	41.6									50.351	0.608	-3.360	174	210,28
008	11200	6 SB FW	69	80	FW	1.000	91.2		91.2								51.615	5.917	8.167	15	345,04
009	11200	6 PS FW	69	81	FW	1.000	93.8		93.8								52.903	5.549	-7.616	21	318,31
010	11200	7 SB WB	54	69	WB	1.025	99.5	102.0									43.064	2.078	7.082	357	509,61
011	11200	7 PS WB	54	69	WB	1.025	102.3	104.8									43.166	2.175	-7.101	366	518,41
012	11200	9 SB WB	37	54	WB	1.025	98.3	100.8									30.662	0.565	3.719	483	513,50
013	11200	9 PS WB	37	54	WB	1.025	96.5	98.9									30.755	0.564	-3.789	461	509,10
014	11200	10 SB FW	37	53	FW	1.000	77.8		77.8								31.039	2.377	8.810	9	226,14
015	11200	10 PS FW	37	53	FW	1.000	77.7		77.7								31.043	2.378	-8.811	9	226,14
016	11200	11 SB WB	36	53	WB	1.025	57.3	58.8									30.389	6.243	9.334	9	321,45
017	11200	11 PS WB	36	53	WB	1.025	57.3	58.8									30.389	6.243	-9.334	9	321,45
018	11200	12 SB WB	17	37	WB	1.025	45.2	46.4									19.989	0.522	2.224	173	280,81
019	11200	12 PS WB	17	37	WB	1.025	45.0	46.2									19.942	0.525	-2.308	166	286,54
020	11200	13 SB FW	4	17	FW	1.000	31.2		31.2								8.143	3.388	2.564	31	153,18
021	11200	13 PS FW	4	17	FW	1.000	31.2		31.2								8.143	3.388	-2.564	31	153,18
022	11200	14 SB WB	-10	4	WB	1.025	144.7	148.3									-2.052	6.722	5.258	142	848,41
023	11200	14 PS WB	-10	4	WB	1.025	144.2	147.8									-2.053	6.725	-5.278	140	842,63
024	11200	24 CD SP.PR WB	17	26	WB	1.025	284.4	291.5									14.220	6.470	0.000	4137	1706,30
025	11200	25 ROLL RED. WB/ORO	9	17	WB/ORO	1.025	341.5	350.0				341.5					8.875	6.699	0.000	2997	733,76
026	11200	26 ROLL RED. WB/FW	4	11	WB/FW	1.025	315.4	323.3	315.4								4.611	6.809	0.000	2651	688,62
027	11200	BILGE WATER TK	22	24	MIS	1.000	3.0										15.200	3.100	-2.600	0	15,00
030		CEMENT TK. 1	27	33	CEM	2.400	61.8							148.3			20.100	5.598	-6.900	15	
031		CEMENT TK. 2	27	33	CEM	2.400	55.9							134.2			20.100	5.650	-2.300	15	
032		CEMENT TK. 3	27	33	CEM	2.400	55.9							134.2			20.100	5.650	2.300	15	
033		CEMENT TK. 4	27	33	CEM	2.400	61.8							148.3			20.100	5.598	6.900	15	
034	11200	34 PS SPEC.PROD	18	25	SPE	1.500	73.4									110.1	14.213	6.587	-6.472	45	
035	11200	35 PS SPEC.PROD	18	25	SPE	1.500	62.4									93.5	14.150	6.500	-2.299	22	
036	11200	35 SB SPEC.PROD	18	25	SPE	1.500	62.4									93.5	14.150	6.500	2.299	22	
037	11200	34 SB SPEC.PROD	18	25	SPE	1.500	73.4									110.1	14.213	6.587	6.472	45	
040	11200	17 SB BRI/MUD/WB/ORO	45	53	BRI/MUD/WB/ORO	2.800	80.4	82.4			225.1	80.4	225.1				33.902	6.479	6.757	38	136,22
041	11200	17 PS BRI/MUD/WB/ORO	45	53	BRI/MUD/WB/ORO	2.800	93.8	96.2			262.8	93.8	262.8				33.595	6.669	-6.814	38	142,13
042	11200	19 SB BRI/MUD/WB/ORO	37	46	BRI/MUD/WB/ORO	2.800	100.5	103.0			281.5	100.5	281.5				27.995	6.670	6.833	39	148,90
043	11200	19 PS BRI/MUD/WB/ORO	37	46	BRI/MUD/WB/ORO	2.800	100.5	103.0			281.5	100.5	281.5				27.995	6.670	-6.833	39	148,90
044	11200	16 SB CHA/WB	50	58	CHA/WB	1.025	157.0	161.0									36.871	5.008	2.699	36	163,23
045	11200	16 PS CHA/WB	50	58	CHA/WB	1.025	157.0	161.0									36.871	5.008	-2.699	36	163,23
046	11200	18 SB BRI/CHA/WB/ORO	42	50	BRI/WB/CHA/ORO	2.800	163.9	168.0			458.9	163.9					31.311	4.923	2.800	36	167,60
047	11200	18 PS BRI/CHA/WB/ORO	42	50	BRI/WB/CHA/ORO	2.800	163.9	168.0			458.9	163.9					31.311	4.923	-2.800	36	167,60
048	11200	20 SB BRI/MUD/ORO	34	42	MUD/BRI/ORO	2.800	159.4				446.3	159.4	446.3				25.681	5.028	2.800	36	176,40
049	11200	20 PS BRI/MUD/ORO	34	42	MUD/BRI/ORO	2.800	159.4				446.3	159.4	446.3				25.681	5.028	-2.800	36	176,40
050	15250	3 SB FO	84	101	FO	0.900	173.1			155.8							63.460	7.754	2.559	139	304,53
051	15250	3 PS FO	84	101	FO	0.900	175.9			158.4							63.496	7.752	-2.526	145	368,45
052	9560	5 C FO	64	77	FO	0.900	77.5			69.7							48.372	1.488	0.000	593	394,06
054	9560	15 SB FO	53	62	FO	0.900	88.7			79.8							39.258	6.965	6.815	47	140,14
055	9560	15 PS FO	53	62	FO	0.900	101.1			91.0							39.590	7.000	-6.679	55	169,97
056	9560	9 C FO	38	54	FO/BO	0.900	180.1			162.1					149.5		31.274	4.858	0.000	114	228,16
057	9560	57 SB FO DAY	57	60	FO	0.900	27.8			25.0							40.243	5.400	2.615	2	86,58
058	9560	58 PS FO DAY	57	60	FO	0.900	27.8			25.0							40.243	5.400	-2.615	2	81,62
059	9560	59 FO SETTL	54	59	FO	0.900	23.2			20.8							39.003	5.400	-0.472	1	62,36
060	9560	7 C FO OVFL	54	64	MIS	1.000	35.1										41.317	1.500	0.000	147	194,81
061	11200	61 LO M.GEAR	66	71	LO	0.924	7.4										47.018	8.000	6.987	1	31,70
062	11200	62 HO LP HYD	66	71	HO	0.924	13.2										47.050	8.000	5.085	4	47,60
063	11200	63 LO M.ENG	66	71	LO	0.924	13.2										47.050	8.000	-5.085	4	47,60
064	11200	64 LO AUX.ENG	66	71	LO	0.924	7.4										47.018	8.000	-6.987	1	31,70
065	11200	65 LO ST TUB	36	37	LO	0.924	4.9										24.650	7.000	-8.000	0	29,80
066	11200	66 HP HO	36	37	HO	0.924	4.9										24.650	7.000	8.000	0	29,80
067		67 FO EM GEN	80	81	FO	0.900	1.8			1.7							55.272	24.933	4.295	0	12,61
068	9560	68 FO SETTL	56	60	FO	0.900	23.5			21.1							39.813	5.400	0.658	1	63,16
070	11200	70 SEW	81	84	MIS	1.000	32.1										56.821	5.794	6.531	6	113,76
071	11200	71 HOT W	69	74	MIS	1.000	12.7										49.395	7.060	-8.922	1	85,84
072	9600	8 SB WB / UREA	53	62	WB	1.025	43.2	44.3									39.520	5.251	9.381	1	209,04
073	9600	8 PS WB / UREA	53	62	WB	1.025	43.2	44.3									39.520	5.251	-9.381	1	209,04
080	11200	80 LO ST THR	0	1	LO	0.924	0.6										0.300	7.500	-7.350	0	4,40
081	11200	81 HO TUG	-1	0	HO	0.924	0.6										-0.300	7.500	-7.350	0	4,40
082	11200	82 FW COOL ST.ROLL	-3	-2	MIS	1.000	0.7										-1.500	7.392	-4.540	0	5,78
083	11200	83 HO SH YAW	0	1	HO	0.924	0.6										0.300	7.500	7.350	0	4,40
084	11200	84 HO ST GEAR	-1	0	HO	0.924	0.6										-0.300	7.500	7.350	0	4,40
090	11200	90 DIRTY OIL	63	64	MIS	1.000	8.4										43.549	0.653	0.000	64	44,95
091	11200	91 LO DROP	61	63	MIS	1.000	8.3										42.496	0.662	2.806	16	47,05
092	11200	92 FW COOL DROP	59	61	MIS	1.000	8.2										41.111	0.644	2.794	16	47,53
093	11200	93 BILGE	54	59	MIS	1.000	16.2										38.781	0.540	2.388	30	76,38
094	11200	94 HO DROP	59	63	MIS	1.000	16.5										41.811	0.653	-2.801	32	89,76
095	11200	95 SLUDGE	54	59	MIS	1.000	16.2										38.781	0.540	-2.388	30	76,38
096	11200	96 BILGE SETL	68	71	MIS	1.000	5.3										47.750	7.000	3.510	0	40,40
097	11200	97 LO TUN THR	70	71	LO	0.924	1.8										48.450	7.000	-3.510	0	15,20
098	11200	98 LO AZIMUTH	69	70	LO	0.924	1.8										47.750	7.000	-3.510	0	15,20
099	11200	99 SUP HO	68	69	HO	0.924	1.8										47.050	7.000	-3.510	0	15,20
100		HPR	34	38	ENG	1.000	30.5										23.919	4.423	0.015	1	
101		VOID 1	1	9	VOI	1.000	21.2										3.122	0.956	0.000	2	
102		VOID 2	11	13	VOI	1.000	4.5										7.500	-0.012	0.000	2	
103		VOID 3	15	17	VOI	1.000	5.0										10.385	0.092	0.000	2	
104		CD 1	90	92	CD	1.000	1.6										62.945	1.965	0.000	0	19,47
105		CD 2	83	85	CD	1.000	3.0										57.647	0.925	-0.297	1	27,50
106		CD 3	79	85	CD	1.000	17.3										56.233	4.766	6.344	4	86,90
107		CD 4 PS	68	69	CD	1.000	2.2										47.048	3.551	-8.999	0	31,21
108		CD 4 SB	68	69	CD	1.000	4.5										47.049	5.305	9.235	0	31,21
109		CD 5 PS	53	54	CD	1.000	4.6										36.550	2.617	-9.138	0	33,84
110		CD 5 SB	53	54	CD	1.000	4.6										36.550	2.617	9.138	0	33,84
111		CD 6 PS	97	102	CD	1.000	7.6										67.569	10.307	-4.925	4	79,45
112		CD 6 SB	97	102	CD	1.000	7.6										67.569	10.307	4.925	4	79,45
113		C/L SB	101	105	CHA	1.025	40.0										69.846	8.474	1.368	6	135,02
114		C/L PS	101	105	CHA	1.025	46.1										69.853	8.438	-1.186	8	140,16
		TOTAL WEIGHTS						3384.5	1174.6	810.6	2861.2	1363.3	1943.5	564.9	149.5	407.4					
		TOTAL VOLUMES						3301.9	1174.6	900.6	1021.9	1363.3	694.1	235.4	180.1	271.6					

NOTE:
1. ✦ PLUGS NS 2673 M72x2 – IN WATER TANKS MARKED WITH NO./CONTENTS
2. B/W: BILGE WELL
3. VOLUMES ARE APPROX. VALUES

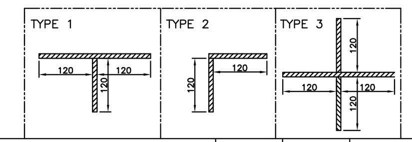

Rev.	Date	Reason for issue	Made by	Chk'd by	Disc. appr.	Client appr.
I	19.05.10	YARD/OWNER COMMENTS	JEHo			
H	19.04.10	GENERAL UPDATE TANK TABLE	JEHo			
G	23.03.10	OWNER COMMENTS	JEHo			
F	21.01.10	OWNER COMMENTS	JEHo			
E	23.12.09	YARD COMMENTS	JEHo			
D	11.11.09	YARD COMMENTS	JEHo			
C	02.11.09	CD 6 PS/SB ADDED IN TABLE	JEHo			
B	15.12.08	DIF. MODIFICATIONS	JEHo			
A	20.08.08	BOTTOM PLUGS ADJ./BILGE TK. ADDED ++	AR/JEHo			
0	16.07.07	FIRST ISSUE	AR			

CUSTOMER
SEKWANG HEAVY INDUSTRIES

Yard no.: 1187 | 1188 | 1189 | 1190

TITLE
TANK PLAN

Rolls-Royce
Rolls-Royce Marine AS
dept. Ship Technology - Offshore
Sjøgata 80, P.O.Box 160
N-6067 Ulsteinvik, NORWAY
Tel.:+47 70 01 40 00
Fax:+47 70 01 40 31
Homepage: www.rolls-royce.com
Enterprise NO 980 371 379
UT-Design™

Scale	Format	PROJECT NO.	SFI no.	Seq. no.	Revision
1:200	A0	067307	101	020	I

This drawing/specification is the property of Rolls-Royce Marine AS, dept. Ship Technology - Offshore, and must not be copied or the contents thereof or any information received in conjunction therewith must not be imported to any unauthorised third party. It must not be used for any other project than for which it was originally ordered. The receipt of the drawing / specification implies that the conditions mentioned herein are accepted.